宝鸡机床集团有限公司
BAOJI MACHINE TOOL GROUP CO.,LTD
宝鸡忠诚机床股份有限公司
BAOJI ZHONGCHENG MACHINE TOOL CO.,LTD

BOCHI 宝鸡机床

BV系列

立式加工中心

Machining Center

匠 心 智 造 中 国 好 机 床



地址:中国陕西省宝鸡市高新十四路
Add: Gaoxin 14 Road,Baoji,Shaanxi,China
邮编Postcode:721013
企业邮箱Email:gsbgs@bjmtw.com
官方网址Http://www.bjmtw.com

国内贸易Domestic Trade
电话Tel:0917-3566908 3566909
传真Fax:0917-3566966
邮箱Email:xsgs@bjmtw.com

国际贸易International Trade
电话Tel:+86-917-3566893 3566897
传真Fax:0917-3566900
邮箱Email:sales@bjmtw.com

全国客户服务热线Hot Line:400-119-9196

本样册内所印各种说明及图片如有变动，恕不另行通知（202503版）
Design and specifications given herein are subject to change without prior（Version 202503）

www.bjmtw.com





01 产品概况 Product Overview

BV系列立式加工中心采用人字型大跨距立柱、大跨距导轨结构，具备高速、高精度、高刚性等特点，配置丰富。适用于阀类、凸轮、模具、板盘类和箱体类零件的铣、钻、扩、镗、攻、锪等各种高速高精加工。既可用于中小批量多品种加工生产，也可以纳入自动线进行批量生产。后缀B为三轴淬火硬轨，后缀H为三轴直线滚柱导轨。

BV series vertical machining center adopts the herringbone large-span column and large-span guideway structure. It is characterized by high speed, high precision and high rigidity. It is suitable for milling, drilling, expanding, boring, tapping, countersinking and other high-speed, high-precision machining of valves, cams, moulds, plates and box parts. It can be used for medium and small lot production with multiple machining requirements, and can also be used in automatic lines for mass production. Model with B is for three-axis hardened hard guideway, model with H is for three-axis linear roller guideway.

02 性能优势 Performance advantages

BV-H 采用直线导轨，具备高速、高精等特性

BV-H adopts linear guideway and has high speed and high precision.

丝杠固定结构采用全新双面对顶定位方式，极大的提高轴向刚性，保证了丝杆组件运动的平稳性、可靠性和精度持久性。

The fixed structure of the screw adopts a new double-sided positioning method, greatly improving the axial rigidity, ensuring the smoothness, reliability, and precision durability of the screw movement unit.

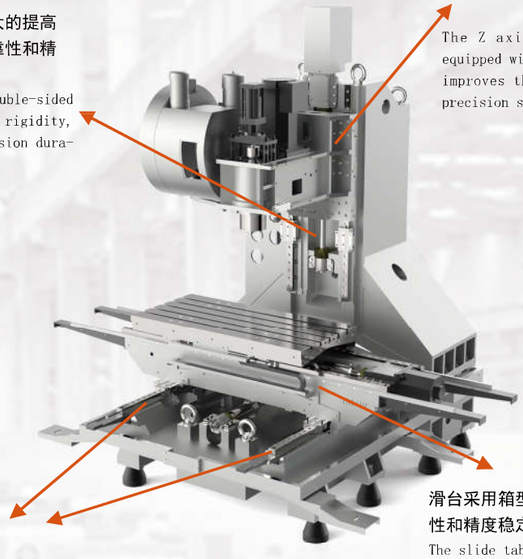

Z轴线轨配置六个滑块，提升主轴刚性和精度稳定性。

The Z axis linear guideway is equipped with six slide block, which improves the spindle rigidity and precision stability.

Y轴采用大跨距导轨结构，提升整机刚性和稳定性。

The Y-axis adopts large span guideway structure to improve the machine rigidity and stability.

滑台采用箱型结构，保证X、Y轴刚性和精度稳定性。

The slide table adopts box structure to ensure the rigidity and precision stability of X and Y axes.

BV-B 采用磨削硬轨，具备高刚、高精等特性

BV-B adopts grinding hard guideway with high rigidity and high precision.

采用人字型大跨距立柱。

Adopt herringbone large span column.

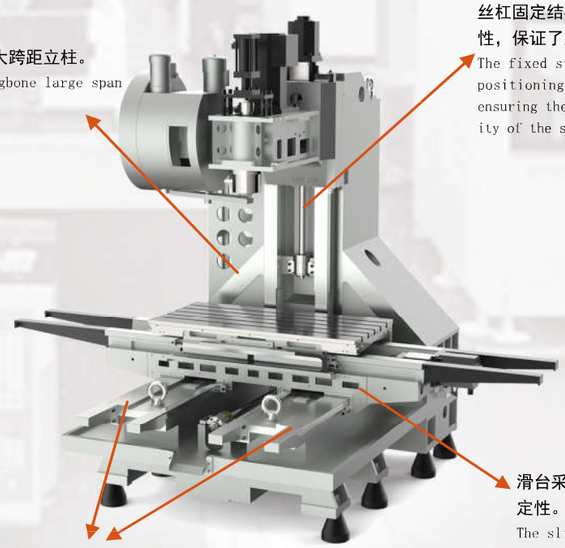

丝杠固定结构采用全新双面对顶定位方式，极大提高轴向刚性，保证了丝杆组件运动的平稳性、可靠性和精度持久性。

The fixed structure of the screw adopts a new double-sided positioning method, greatly improving the axial rigidity, ensuring the smoothness, reliability, and precision durability of the screw movement unit.

Y轴采用大跨距导轨结构，提升整机刚性和稳定性。

The Y-axis adopts large span guideway structure to improve the machine rigidity and stability.

滑台采用箱型结构，保证X、Y轴刚性和精度稳定性。

The slide table adopts box structure to ensure the rigidity and precision stability of X and Y axes.

03 机床数据 Machine data

BV系列立式加工中心：主要规格参数

项目 Item		单位 Unit	BV642B	BV852B	BV1162B	BV642H	BV852H	BV1162H
工作台 Workpiece	外形尺寸(宽×长) Machine size (W*L))	mm	420×800	520×1050	620×1300	420×800	520×1000	620×1300
	T型槽 T slot	mm	3-18(H8)	5-18(H8)	5-18(H8)	3-18(H8)	5-18(H8)	5-18(H8)
	T型槽间距 T-shaped groove spacing	mm	125	90	100	125	90	100
	最大承重 Max. loading capacityy	kg	600	600	1000	500	600	1000
行程及范围 Travel and capacity	X左右行程 X-axis left and right travel	mm	600	800	1100	600	800	1100
	Y前后行程 Y-axis forward and backward travel	mm	400	500	650	400	500	650
	Z上下行程 Z-axis up and down travel	mm	500	600	650	500	600	650
	主轴端面至工作台面距离 Distance from spindle nose to worktable surface	mm	110-610	110-710	130-780	110-610	110-710	130-780
	主轴中心至立柱导轨距离 Distance from spindle center to column guideway	mm	490	560	690	500	570	690
主轴 Spindle	主轴锥孔 Spindle bore		BT40					
	主轴功率 Spindle power	kW	7.5/11(FANUC)	11/15(FANUC)		7.5/11(FANUC)	11/15(FANUC)	
	主轴转速 Spindle speed	r/min	10000	10000	8000	10000	10000	8000
进给 Feed	最高进给速度（X/Y/Z） Max. Feed speed (X/Y/Z)	mm/min	10000			10000		
	快速移动速度（X/Y/Z） Rapid speed (X/Y/Z)	m/min	20/20/20			48/48/48	48/48/48	48/48/32
精度 Accuracy	定位精度 Position accuracy X	mm	0.008		0.012	0.006		0.01
	定位精度 Position accuracy Y	mm	0.008		0.010	0.006		0.008
	定位精度 Position accuracy Z	mm	0.008		0.010	0.006		0.008
	重复定位精度 Repeat position accuracy X	mm	0.006		0.010	0.005		0.008
	重复定位精度 Repeat position accuracy Y	mm	0.006		0.008	0.005		0.006
	重复定位精度 Repeat position accuracy Z	mm	0.006		0.008	0.005		0.006
其它 Other	电源 Power	kVA	15	20	20	15	20	20
	气压 Air pressure	Mpa	0.6-0.8					
	气源流量 Air Ventilation	L/min	350					
	机床尺寸(长×宽×高) Machine size (L*W*H)	mm	2350×2150×2450	3050×2300×3100	3430×2700×3200	2800×2150×2450	3050×2300×3100	3430×2700×3200
			（标配，不含排屑器） (Standard configuration,without chip conveyor)					
	机床重量(净重) Machine weight (net weight)	kg	4300	6000	7600	4000	5500	7600

注：此页参数为标准配置时参数，配置变更时部分参数可能会随之改变

Note:The parameters on this page are standard configuration parameters may change when the configuration is changed.

机床配置表 ●标配 ○选配 -没有

项目 Item	型号规格 Model type	BV系列 BV Series Machine Tool					
		642B	852B	1162B	642H	852H	1162H
控制系统 Control system		FANUC XXX(标配) Standard configuration	XXXXXXXXXX XXXXXXXX	广数25i□ XX XGSK 25i□	西门子828D□ SIEMENS 828D□ (选配) Optional configuration	华中818D□ FNC 818D□	宝机B80M□ BochiB80M□
防护型式 Guard type	自选 optional configuration	手动前排防护□ Manual front guard□	手动后排全防护□ Manual rear full guard□		前侧链排防护□ Front side chain guards□	双后链排防护□ Double rear chain guards□	
主轴 Spindle	皮带式8000r/min主轴 Belt type 8000r/min spindle	○	○	●	○	○	●
	皮带式10000r/min主轴 Belt type 10000r/min spindle	●	●	○	●	●	○
	直联12000r/min 高速主轴 Lnline 12000r/min high speed spindle	○	○	○	○	○	○
圆盘刀库 Disc tool magazine	BT40X24	●	●	●	●	●	●
	BT50X24	—	—	○	—	—	○
主轴油冷单元 Spindle oil cooling unit		○	○	○	○	○	○
四轴 4-axis	盘面直径210 Disk diameter 210	○	○	○	○	○	○
	盘面直径255 Disk diameter 255	—	○	○	—	○	○
	盘面直径320 Disk diameter 320	—	—	○	—	—	○
排屑器 Chip conveyor		○	○	○	○	○	○

04 典型样件 Typical samples



典型样件1 Typical samples 1

典型样件2 Typical samples 2





典型样件3 Typical samples 3

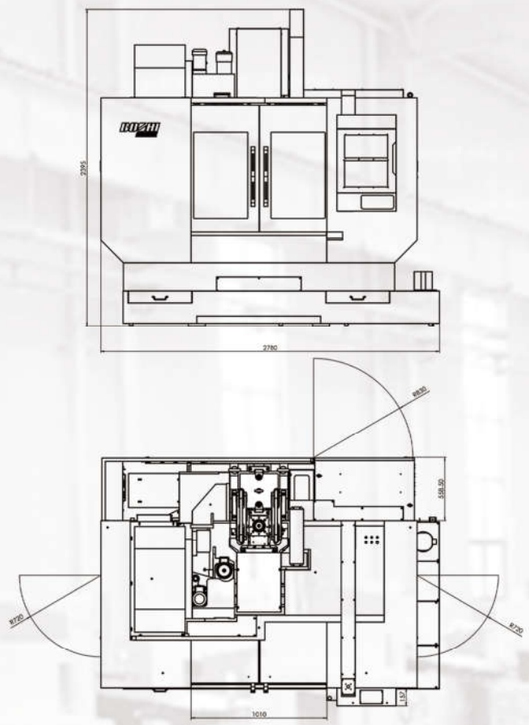

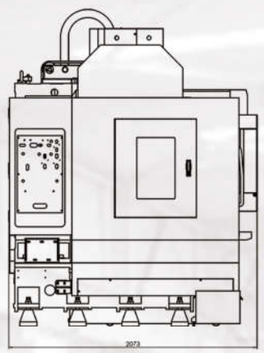

BV642B/H外形图

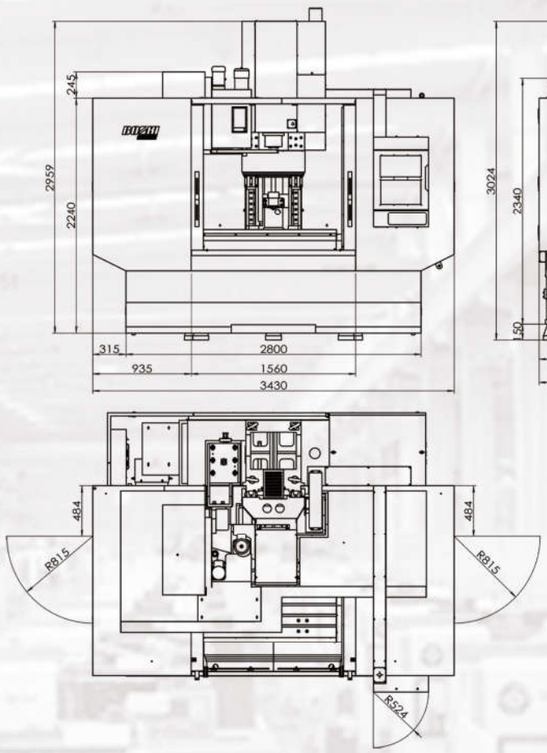

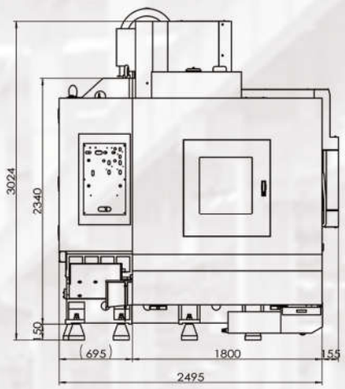

BV1162B/H外形图

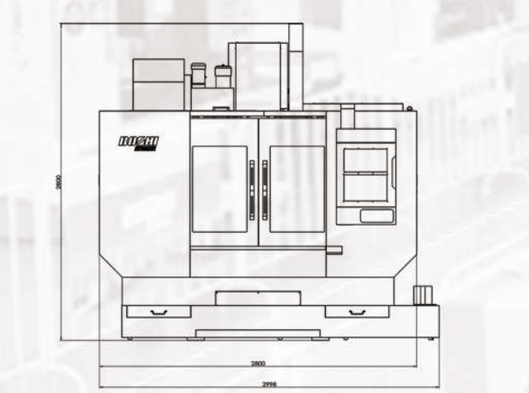

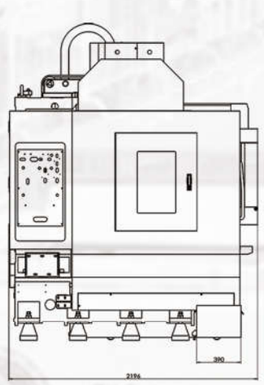

BV852B/H外形图