宝鸡机床集团有限公司
BAOJI MACHINE TOOL GROUP CO.,LTD
宝鸡忠诚机床股份有限公司
BAOJI ZHONGCHENG MACHINE TOOL CO.,LTD

BOSHI 宝鸡机床

CK75系列

全功能卧式数控车床

CNC lathe

匠 心 智 造 中 国 好 机 床



地址:中国陕西省宝鸡市高新十四路
Add: Gaoxin 14 Road,Baoji,Shaaxi,China
邮编Postcode:721013
企业邮箱Email:gsbgs@bjmtw.com
官方网址Http://www.bjmtw.com

国内贸易Domestic Trade
电话Tel:0917-3566908 3566909
传真Fax:0917-3566966
邮箱Email:xsgs@bjmtw.com

国际贸易International Trade
电话Tel:+86-917-3566893 3566897
传真Fax:0917-3566900
邮箱Email:sales@bjmtw.com

全国客户服务热线Hot Line:400-119-9196

本样册内所印各种说明及图片如有变动，恕不另行通知（202503版）
Design and specifications given herein are subject to change without prior（Version 202503）

www.bjmtw.com

01 产品概况 Product Overview

1. CK75系列数控车床

整体式斜床身，高刚性精密主轴系统，伺服转塔刀架，性能稳定，规格齐全，配置丰富，具有高的精度保持性和加工稳定性。可配机内自动化系统，实现整机自动化加工。后缀字母A代表国产配置，C代表滚动导轨，D代表电主轴。

1.CK75 Series CNC lathe

Integral slant bed,high rigidity precision spindle system,servo turret,stable performance,complete specifications,rich configuration,high accuracy retention and machining stability.Can be equipped with in-machine automation system to realize automatic machining.Suffix letter A means domestic configuration,C means roller guideway,D means motorized spindle.

2. CK75-H/HY系列车削中心

整体式斜床身，高刚性精密主轴系统，BMT伺服动力刀架或者带Y轴伺服动力刀架，性能稳定，规格齐全，配置丰富，具有高的精度保持性和加工稳定性。可配机内自动化系统，实现整机自动化加工。后缀字母H代表车削中心，HY代表带Y轴车削中心。

2.CK75-H/HY Series Turning Center

Integral slant bed,high rigidity precision spindle system,BMT servo-powered turret or with Y-axis servo-powered turret,stable performance,complete specifications,rich configurations,high accuracy retention and machining stability.It can be equipped with automation system to realize automatic machining with optional configuration.The suffix letter H means turning center,HY means turning center with Y-axis.

02 性能优势 Performance advantages

● 采用高强度铸铁整体斜床身，强度高吸震性好；多次时效处理，有效抑制了加工过程中切削力导致的变形和应力；

● 主轴组件采用精密角接触推力球轴承与双列圆柱滚子轴承组合排列、动平衡校正，可保持主轴高精度及刚性；主轴箱总成通过跑合测试，调整主轴轴承预紧，监测主轴升温，热变形等，使主轴在长期工作时启动快速、平稳、精度稳定；

● X/Z轴采用伺服电机与滚珠丝杠直接连接，进给精度高，可获得更高的加工精度；

● 液压卡盘夹紧、松开和液压尾座套筒伸缩除程序控制外，均可脚踏开关控制，方便快捷；液压压力，表盘显示，调整安全、方便；

● 导轨、滚珠丝杠副采用集中自动稀油润滑，各个节点配有定量式分油器，定时定量向各润滑部位注油，保证各滑动面均匀润滑，有效地减小摩擦阻力，提高了运动精度，保证了滚珠丝杠和导轨副的使用寿命；

● It adopts high-strength cast iron integral slant bed with high strength and good vibration absorption;multiple agingtreatment effectively suppresses the deformation and stress caused by cutting force during machining process;

● The spindle assembly adopts precision angular contact thrust ball bearings and double-row cylindrical roller bearings with combined arrangement and dynamic balance correction,which can maintain the spindle's high precision and rigidity;the headstock assembly passes the running-in test,adjusts the preload of the spindle bearings,monitors the spindle's temperature rise,thermal deformation, etc.so as to enable the spindle to start up quickly,smoothly and stably with stable precision in the long-term work;

● X/Z axis adopts servo motor directly connected with ball screw,which has high feeding precision and can get higher machining accuracy;

● the clamping and unclamping of hydraulic chuck,advance and retreat of hydraulic quill can be contolled by program as well as pedal swith,which is convenient and quick.the hydraulic pressure is shown on dial makes adjustment safe and easy;

● The guideway and ball screw adopt centralized automatic thin oil lubrication,and each node is equipped with quantitative oil dispenser,which injects oil into each lubrication part at regular intervals to ensure uniform lubrication of the sliding surfaces,effectively reduce friction resistance,improve motion precision and ensure the service life of the ball screw and guideway;



03 典型样件 Typical samples



典型样件1

典型样件2





典型样件3



1

床身：采用高强度铸铁整体斜床身，负载高、刚性高、吸震性好。硬轨机床导轨副采用宽矩形淬硬磨削导轨及贴塑、精密手工刮研工艺，使摩擦阻力小，精度保持性长久。线轨机床导轨副采用线性导轨副，动、静态摩擦力小，快速移动，精度保持性长久。

Bed: It adopts high-strength cast iron whole inclined bed, with high load, high rigidity and good vibration absorption. The hard guideway is treated with hardening and grinding, also uses turcite and precision hand scraping processes, which can achieve small friction resistance and keep the precision for a long time. The machine tool of linear guideway, its dynamic and static friction is small, rapid movement, precision retention for a long time.

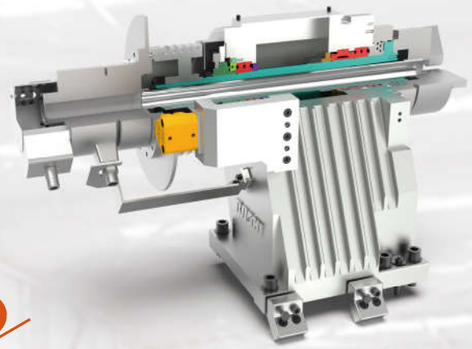

2

主轴：采用精密角接触推力球轴承与双列圆柱滚子轴承组合排列、动平衡校正，可保持主轴高精度及高刚性。

Spindle: It adopts precision angular contact thrust ball bearings and double row cylindrical roller bearings combined arrangement, dynamic balance correction, which can maintain high precision and high rigidity of the spindle.



3

液压尾座：采用液压驱动套筒伸缩顶紧工件，保证加工的稳定性。

程控尾座：采用程序控制牵引杆伸缩和导轨锁紧松开的方式，由床鞍带动液压尾座的前后移动。

伺服尾座：通过伺服电机驱动尾座的移动，实现了尾座自动化和智能化，提高了加工效率和操作简易性。

Hydraulic tailstock: It realize the tailstock quill advance and retreat of the workpiece tightening and loosening to ensure the stability of machining.

Program-controlled tailstock: It adopts program-controlled traction bar expansion and guideway locking and loosening, and the hydraulic tailstock is driven by the bed saddle to move forward and backward.

Servo tailstock: The movement of tailstock is driven by servo motor, which realizes the automation and intelligence of tailstock and improves the machining efficiency and operation simplicity.

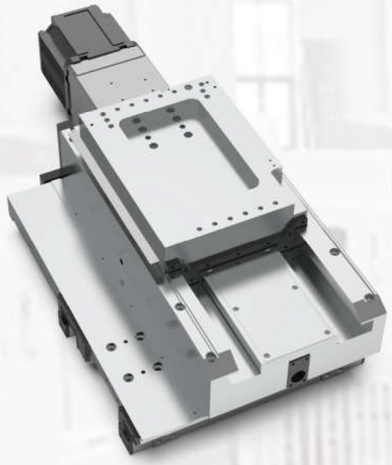

5

床鞍：采用大跨距、高强度铸铁床鞍，具有强大的抵消重切削振动的能力。

Saddle: It adopts large span and high strength cast iron saddle, which has strong ability to offset the vibration of heavy cutting.



6

进给系统：采用伺服电机与滚珠丝杠直接连接，进给精度高，可获得更高的加工精度。

Feeding system: it adopts servo motor directly connected with ball screw, with high feeding precision, which can obtain higher machining precision.

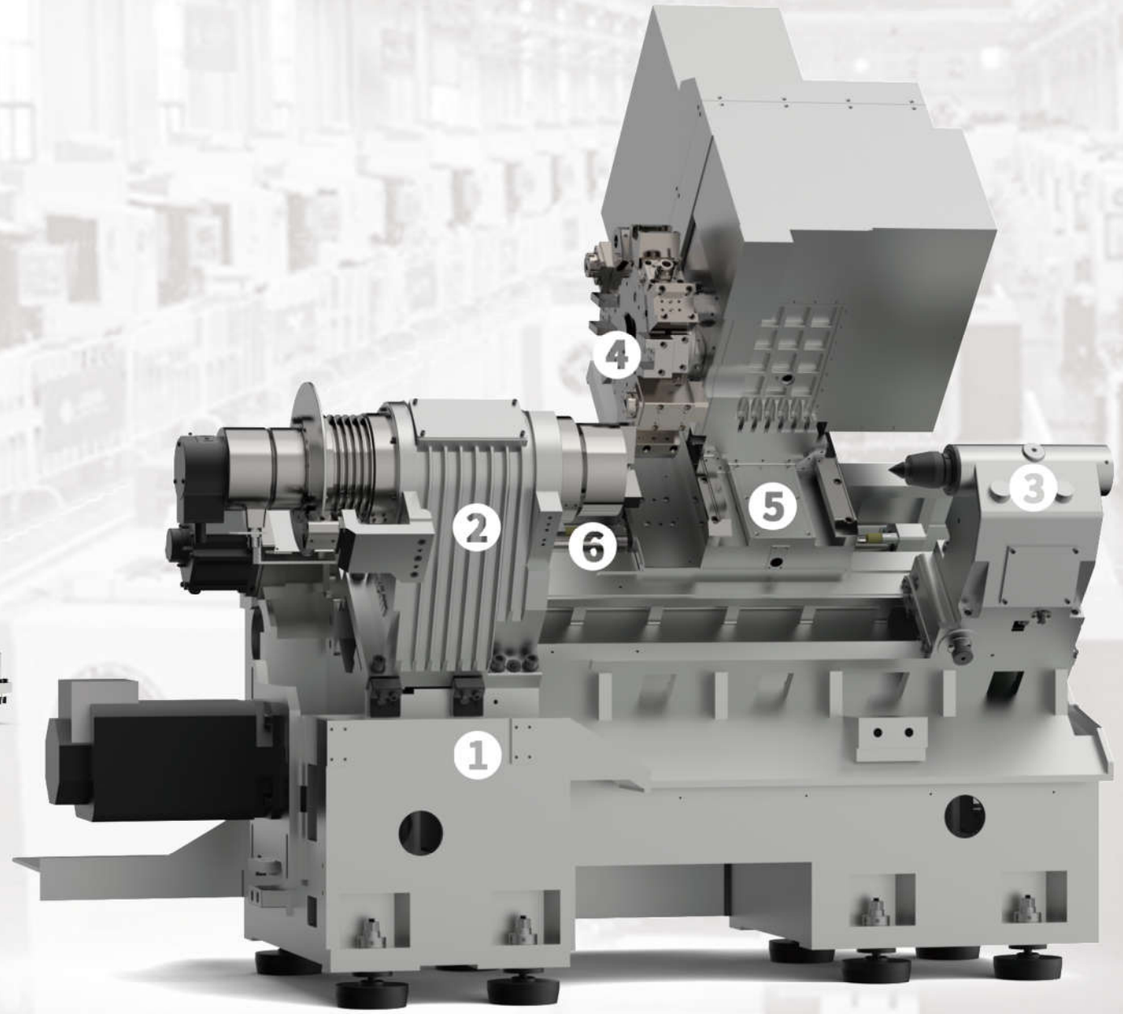



4

伺服刀架：刀盘转位采用伺服电机精确分度，换刀速度快，三片式精密端齿盘及液压锁紧机构，定位精度高、锁紧可靠。

液压刀架：采用液压马达驱动，扭矩大，换刀平稳，刀盘松开夹紧采用油压机构，动作可靠，适合重切削。

动力刀架：以伺服刀架为基体，辅加BMT径向动力模块的组合式结构，布局紧凑，结构合理。刀具动力由独立动力电机提供，扭矩大、噪音低。

带Y轴动力刀架：采用箱体结构，使用伺服马达，与丝杠直连传动。Y轴刀架可大幅提高复杂工件的加工能力。

Servo turret: The turret rotating position adopts servo motor for precise indexing, fast tool change, three-piece precision end gear disk and hydraulic locking mechanism, high positioning accuracy and reliable locking.

Hydraulic turret: driven by hydraulic motor, high torque, smooth tool change, oil pressure mechanism for turret release and clamping, reliable action, suitable for heavy cutting.

Power tool holder: Servo turret as the base, supplemented by BMT radial power module of the combined structure, compact layout and reasonable structure. The tool power is provided by independent power motor with high torque and low noise.

With Y-axis power turret: it adopts box structure, uses servo motor, and direct connection transmission with screw. Y-axis turret can greatly improve the machining ability of complex workpieces.

04 机床数据 Machine data

项目 Item		单位 Unit	CK7516	CK7520	CK7525	CK7530	CK7550
加工范围 Capacity	床身最大回转直径 Max.swing diameter over bed	mm	Φ430	Φ570/Φ570/Φ560	Φ650/Φ650/Φ640	Φ670	Φ850
	最大加工长度 Max. processing length	mm	500/1000	500/1000/1500	500/1000/1500	800/1500/2000/3000	1500/2000/3000
	最大加工直径 Max. processing diameter	mm	Φ285	Φ370	Φ450	Φ670	Φ750
	床鞍最大回转直径 Max.swing diameter over slide	mm	Φ280	Φ390	Φ440	Φ470	Φ600
	液压卡盘直径 Hydraulic chuck diameter	in	Φ165（6”）	Φ210（8”）	Φ265（10”）	Φ305（12”）	Φ530（21”）
主轴 Spindle	主轴头形式 Spindle nose type	mm	A2-6	A2-8	A2-8	A2-8	A2-11
	主轴孔径 spindle bore	mm	Φ57	Φ62	Φ87	Φ105	Φ135
	主轴轴承直径（前后） Spindle bearing diameter(Front/Back)	mm	Φ90/Φ80	Φ100/Φ90	Φ120/Φ110	Φ140/Φ130	Φ200/Φ180
	主轴转速 Spindle speed	r/min	55-5500	40-4000	30-3000	不带减速机：25-2200 带减速机：L:12-830 H:50-2200 Without reducer：25-2200 With reducer：L:12-830 H:50-2200	L:8-530 H:30-1200
	主电机功率 Spindle motor power	Kw	11/15	11/15	15 / 18.5	不带减速机：30/45 带减速机：30/45 Without reducer：30/45 With reducer：30/45	30 / 37
尾座 Tailstock	套筒直径/行程 Quill diameter/Travel	mm	Φ70X80	Φ90X100	Φ100X100	Φ110X150	Φ150x150
	标准/活主轴结构尾座顶尖锥度 standard/living spindle structure tailstock center taper	MT No	2/4	5/4	5/4	6/5	6
床鞍 Saddle	倾斜角度 Slant degree	DEG	45°	45°	45°	60°	60°
	移动距离X/Z Travel X/Z	mm	X:165 Z:530/1030	X:210 Z:550/1010/1550	X:250 Z:525/1010/1550	325/880/1550/2050/3080	385/1540/2040/3050
	快速移动速度X/Z Rapid speed X/Z	M/min	12/16	12/16	12/16	12/16（3000规格为12/12）	10/12
刀架 Turret	刀位数 Tool number	mm	8/12	8/12	8/12	8/12	8
	刀具尺寸车削 Tool size Turning	mm	20x20	25x25	25x25	32x32	32x32
	刀具尺寸镗孔 Tool size Boring	mm	Φ32	Φ40	Φ40	Φ50	Φ60
其他 Other	机床尺寸（长x宽x高） machine size (L*W*H)	mm	2600/3200×1700×1970	2920/3790/4600×1830×2000	2980/3790/4600×1850×2050	3820/4822/5320/7060×2100×2152	5570/6070/7360×2800×2800
	电源功率 power supply	Kw	35	45	50	60	70
	机床重量 machine weight	Kg	3200/4500	4500/5000/6700	4800/5000/6700	8300/9730/12000/14200	15000/16000/20000
精度 accuracy	定位精度 X / Z Position accuracy X/Z	mm	X:0.009Z:0.009/0.013	X:0.009Z:0.009/0.013/0.018	X:0.009Z:0.009/0.013/0.018	X:0.009Z:0.010.018/0.018/0.02	X:0.009Z:0.018/0.018/0.022
	重复定位精度 X / Z Repeat position accuracy X/Z	mm	X:0.004Z:0.004/0.006	X:0.004Z:0.004/0.006/0.007	X:0.004Z:0.004/0.006/0.007	X:0.004Z:0.005/0.007/0.007/0.008	X:0.004Z:0.007/0.007/0.008
	圆度 roundness	mm	≤0.0025	≤0.0025	≤0.004	≤0.004	≤0.004

注：此页参数为标准配置时参数，配置变更时部分参数可能会随之改变

04 机床数据 Machine data

机床配置表 ●标配 ○选配 -没有

主要配置 Main Specification	品牌厂家 Brand manufacturers		CK7516	CK7516A	CK7516C	CK7520	CK7520A	CK7520A（大孔径）	CK7520C	CK7525	CK7525A	CK7525C	CK7530	CK7550
控制系统 control system	标配 standard configuration		FANUC（5）	FANUC（5）	FANUC（5）	FANUC（5）	FANUC（5）	FANUC（5）	FANUC（5）	FANUC（5）	FANUC（5）	FANUC（5）	FANUC（5）	FANUC（3A）
	选配 optional configuration					FANUC（1）□	西门子828D□	FANUC（5）□	华中818□	宝机B80T□	广数988T□			
卡盘 chuck	标配 standard configuration	中空 hollow	6寸	6寸	6寸	8寸	8寸	10寸	8寸	10寸	10寸	10寸	12寸	21寸（中实）
	选配 optional configuration	中空 hollow	8寸	8寸	8寸	10寸	10寸	12寸	10寸	12寸	12寸	12寸	15寸	18寸
		中实 solid	6寸、8寸	6寸、8寸	6寸、8寸	8寸、10寸	8寸、10寸	10寸、12寸	8寸、10寸	10寸、12寸、15寸	10寸、12寸、15寸	10寸、12寸、15寸	12寸、15寸、18寸	-
导轨 guideway	矩形淬硬导轨 Rectangular hardened guideway		●	●	-	●	●	●	-	●	●	-	●	●
	线性导轨 Linear guideway		-	-	●	-	-	-	●	-	-	●	-	-
刀架 Turret	8工位伺服刀架 8-station servo turret		●	●	●	●	●	●	●	●	●	●	○	○
	12工位伺服刀架 12-station servo turret		○	○	○	○	○	○	○	○	○	○	○	○
	8工位液压刀架 8-station hydraulic turret		○	○	○	○	○	○	○	○	○	○	●	●
	12工位液压刀架 12-station hydraulic turret		○	○	○	○	○	○	○	○	○	○	○	○
尾座 Tailstock	手动锁紧活顶尖尾座 Manual locking live center tailstock		●	●	●	●	●	●	●	●	●	●	●	●
	程控尾座 Programmable tailstock		○	○	○	○	○	○	○	○	○	○	○	○
排屑装置 chip conveyor	侧排 side-type chain chip conveyor	切屑箱 chip container	○	○	○	○	○	○	○	○	○	○	○	○
		排屑器 chip conveyor	●	●	●	●	●	●	●	●	●	●	●	●
	后排 rear-type chain chip conveyor	切屑箱 chip container	○	○	○	○（1000以上规格无后排）							-	-
		排屑器 chip conveyor	●	●	●	●（1000以上规格无后排）							-	-
电柜 Electric cabinet	热交换器 heat exchanger		○	●	○	○	●	●	○	○	●	○	○	○
	空调 air conditioner		●	○	●	●	○	○	●	●	○	●	●	●
液压单元 hydraulic unit			●	●	●	●	●	●	●	●	●	●	●	●
润滑单元 lubrication unit			●	●	●	●	●	●	●	●	●	●	●	●
气动门 pneumatic doors			○	○	○	○	○	○	○	○	○	○	○	○
液压中心架 hydraulic steady rest			○	○	○	○	○	○	○	○	○	○	○	○
刮油机 oil scraper			○	○	○	○	○	○	○	○	○	○	○	○
气枪、水枪 air gun、water gun			○	○	○	○	○	○	○	○	○	○	○	○
检测装置 detection device			○	○	○	○	○	○	○	○	○	○	○	○
自动化 automatization			○	○	○	○	○	○	○	○	○	○	○	○

04 机床数据 Machine data

项目 Item		单位 Unit	CK7516-H	CK7520-H	CK7525-H	CK7530-H	CK7530-HY	CK7550-H
加工范围 Capacity	床身上最大回转直径 Max. swing diameter over bed	mm	Φ500	Φ650	Φ650	Φ660	Φ750	Φ850
	床鞍上最大回转直径 Max. swing diameter over slide	mm	Φ220	Φ500	Φ500	Φ460	Φ540	Φ600
	最大车削长度 Max. turning length	mm	440	500/1000/1500	500/1000/1500	1350	1350	1850
	最大车削直径 Max. turning diameter	mm	Φ240	Φ340	Φ340	Φ450	Φ500	Φ600
主轴 Spindle	液压卡盘直径 Hydraulic chuck diameter	mm	Φ165	Φ210	Φ254	Φ305	Φ305	Φ530
	主轴头型式 Spindle nose type	GB5900.1	A2—5	A2-8	A2-8	A2-8	A2-8	A2-11
	主轴通孔直径 Spindle bore diameter	mm	Φ57	Φ62	Φ87	Φ105	Φ105	Φ135
	主轴轴承直径（前/后） Spindle bearing diameter(Front/Back)	mm	Φ90/Φ80	Φ100/Φ90	Φ120/Φ110	Φ140/Φ130	Φ140/Φ130	Φ200/Φ180
	主轴转速 Spindle speed	r/min	55～5500	40—4000	30—3000	25-2500	25-2500	L:10-850 H:30-1500
	主电机功率（连续/30分钟） Spindle motor power(Cont./30min)	kW	11/15	11/15	15/18.5	22/30	22/30	30/37
尾座 Tailstock	套筒直径/行程 Quill diameter/Travel	mm	Φ70/80	Φ90/100	Φ100/100	Φ110/150	Φ110/150	Φ150/150
	标准/活主轴结构尾座顶尖锥度 standard/living spindle structure tailstock center taper	MT No	4/2	5/4	5/4	6/5	6/5	6
床鞍 Saddle	倾斜角度 Slant degree	DEG	45°	45°	45°	60°	60°	60°
	移动距离 X//Y/Z Travel X//Y/Z	mm	X:165 Z:450	X:210 Z:550/1010/1550	X:250 Z:550/1010/1510	X:250 Z:1350	X:275 Y:±50 Z:1350	X:330 Z:1850
	快速移动速度 X//Y/Z Rapid speed X/Y/Z	m/min	X:12 Z:16	X:12 Z:16	X:12 Z:16	X:12 Z:16	X:12Y:10Z:16	X:10 Z:12
	伺服电机扭矩 X//Y/Z Servo motor torque X//Y/Z	N.m	X:8 Z:12	X:11 Z:20	X:22 Z:22	X:12 Z:22	X:22Y:12Z:22	X:22 Z:30
刀架 Turret	刀位数 Tool number		12	12	12	12	12	12
	刀具尺寸(车削/镗孔) Tool size(Turning/Boring)	mm	20×20/Φ32	25×25/Φ40	25×25/Φ40	25×25/Φ50	25×25/Φ40	25X25/Φ50
	回转刀具速度 Living tool speed	rpm	80-5000	40—4000	40—4000	4000	4000	30-3000
	最大攻丝直径 Max. tapping diameter	mm	M10	M12	M16	M16	M16	M20
	回转刀具电机功率 Living tool motor power	Kw	2.2/3.7	3.7/5.5	3.7/5.5	3.7/5.5	3.7/5.5	3.7/5.5
其它 Other	电源总容量 power total capacity	KVA	35	35	50	60	60	75
	体积（长×宽×高） Dimension(L*W*H)	mm	2600×1670×1970	2920/3790/4600×1830×2230	2920/3790/4600×1830×2230	4950×2370×2450	4950×2370×2450	6070×2800×2800
	总重量 Total weight		3500	4500/5000/6700	4800/6300/7000	10000	10500	17000
精度 accuracy	定位精度 X/Y/Z Position accuracy X/Y/Z	mm	X:0.009 Z:0.009	X:0.009 Z:0.009/0.013/0.018	X:0.009 Z:0.009/0.013/0.018	X:0.009 Z:0.01/0.018	X:0.009 Y:0.009 Z:0.01/0.018	X:0.009 Z:0.018
	重复定位精度 X/Y/Z Repeat position accuracy X/Y/Z	mm	X:0.004 Z:0.004	X:0.004 Z:0.004/0.006/0.007	X:0.004 Z:0.004/0.006/0.007	X:0.004 Z:0.005/0.007	X:0.004 Y:0.004 Z:0.007	X:0.004 Z:0.007
	圆度 roundness	mm	≤0.0025	≤0.0025	≤0.004	≤0.004		≤0.004

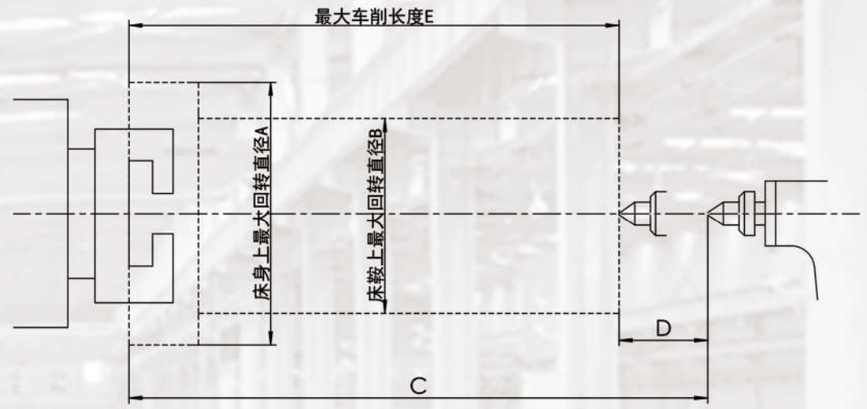

型号 Model	规格 type	A	B	C	D	E
CK7516/A/C CK40S	500	285	280	560	80	500
CK7516/A CK40S	1000	285	280	1070	100	1000
CK7520/A CK50S/C	500	570	390	670	100	500
CK7520/A CK50S/C	1000	570	390	1130	100	1000
CK7520/A CK50S	1500	560	390	1670	100	1500
CK7520C CK50C	750	570	390	930	100	750
CK7525/A/C	500	650	440	630	100	500
CK7525/A/C	1000	650	440	1130	100	1000
CK7525/A	1500	640	440	1670	100	1500
CK7530/CK7530F	800	670	470	910	150	800
CK7530	1500	670	470	1610	150	1500
CK7530	2000	670	470	2110	150	2000
CK7530	3000	670	470	3150	150	3000
CK7550	1500	750	600	1620	150	1500
CK7550	2000	750	600	2120	150	2000
CK7550	3000	750	600	3120	150	3000