宝鸡机床集团有限公司
BAOJI MACHINE TOOL GROUP CO.,LTD
宝鸡忠诚机床股份有限公司
BAOJI ZHONGCHENG MACHINE TOOL CO.,LTD

BOSHI 宝鸡机床

FMC-600V

高架龙门五轴加工中心

Machining Center

匠 心 智 造 中 国 好 机 床



地址:中国陕西省宝鸡市高新十四路
Add: Gaoxin 14 Road,Baoji,Shaanxi,China
邮编Postcode:721013
企业邮箱Email:gsbgs@bjmtw.com
官方网址Http://www.bjmtw.com

国内贸易Domestic Trade
电话Tel:0917-3566908 3566909
传真Fax:0917-3566966
邮箱Email:xsgs@bjmtw.com

国际贸易International Trade
电话Tel:+86-917-3566893 3566897
传真Fax:0917-3566900
邮箱Email:sales@bjmtw.com

全国客户服务热线Hot Line:400-119-9196

本样册内所印各种说明及图片如有变动，恕不另行通知（202503版）
Design and specifications given herein are subject to change without prior（Version 202503）

www.bjmtw.com

FMC-600V



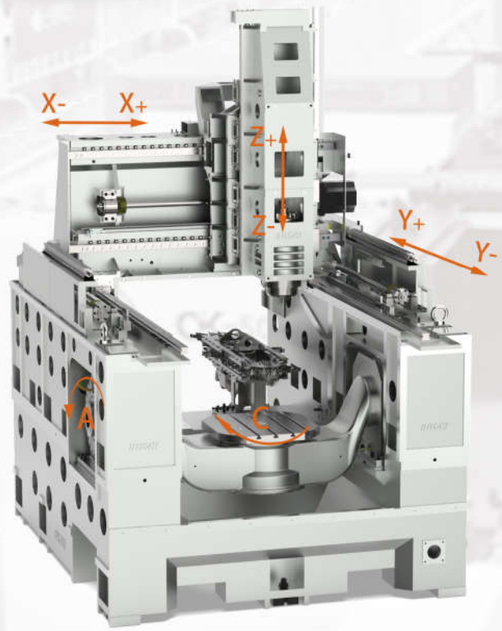

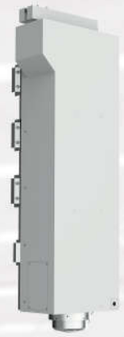

主轴
Spindle



转台
Revolving stage

01 产品概况 Product Overview

FMC-600V是一款高端五轴立式加工中心，机床采用龙门式结构，A、C轴采用摇篮式双直驱结构，一次装夹可完成复杂精密零件的加工，极大的提高了生产效率、产品精度。主要用于各种燃机、叶轮及中小型模具等复杂零件的高效加工，是汽车、工模具、医疗器械等行业必不可少的设备。该类机床是目前用途较广的五轴联动机床。

FMC-600V is a 5-axis vertical machining centre with a gantry type structure and a cradle type double direct drive structure for A and C axes. One clamping can complete the processing of complex precision parts, greatly improving production efficiency and product accuracy. It is mainly used for efficient processing of complex parts such as various combustion engines, impellers and small sized and medium sized moulds, and is an important equipment for automobile, mould, medical equipment and other industries. This type of machine tool is the most widely used five-axis linkage machine tool.

02 性能优势 Performance advantages

- 机床整体采用龙门式结构，刚性足、稳定性好；
- Y轴采用双丝杠驱动，运行平稳可靠；
- A、C轴采用摇篮式双直驱结构，响应快、精度高，最大加工零件直径Φ700mm；
- X、Y、Z及A、C轴分别采用直线光栅尺和精密角度编码器全闭环控制，加工精度高、稳定可靠；
- 采用大功率精密电主轴，转速高、刚性好；主轴最高转速18000r/min，锥孔HSK A63，具备中心出水功能，有效的保证了零件精度及表面质量；
- 刀库布局紧凑，占用空间小、维护方便；标配32位刀库，可选配64位，刀库容量大，可满足复杂零件的加工需求；
- 全封闭整体式防护，有效避免了冷却液及油雾等对周围环境的污染。

- The machine tool adopts a gantry-type structure with sufficient rigidity and good stability;
- The Y-axis adopts double screw drive for smooth and reliable operation;
- A, C axis adopts cradle-type double direct drive structure, fast response. high precision, maximum processing workpiece diameter Φ700mm;
- X, Y, Z and A, C axes each adopt linear scale and precision angle encoder full closed-loop control, high precision, stable and reliable processing;
- Adopting high-power precision motorized spindle with high speed and good rigidity; the maximum speed of the spindle is 18,000r/min, taper hole is HSK A63, with the function of water out of the center, which ensures the precision of workpieces and surface quality effectively;
- Compact layout of tool magazine, occupying small space, easy maintenance; 32-station tool magazine with standard configuration, 64-station tool magazine with optional configuration, large capacity of tool magazine, can meet the processing needs of complex workpieces;
- Fully enclosed integral protection, effectively prevents the environment from being polluted by coolant and oil mist.

03 机床数据 Machine data

机床参数表

项目 Item		单位 Unit	FMC-600V	FMC-800V	FMC-1000V
X轴行程 X-axis stroke		mm	700	1000	1200
Y轴行程 Y-axis stroke		mm	760	700	800
Z轴行程 Z-axis stroke		mm	500	800	800
A轴倾角 A-axis inclination		度	±120°	+30° ～-110°	+30° ～-110°
C轴分度角 C-axis degree angle		度	360°	360°	360°
工作台尺寸 Worktable size		mm	600×600	800×800	1000×1000
允许工件最大重量 The Max.weight of the workpiece allowed		kg	600	600	900
主轴转速 Spindle speed		r/min	18000	18000	18000
主轴锥孔形式 Spindle bore			HSK A63	HSK A63	HSK A63
主轴功率 Spindle power		kW	35	35	35
快进系统 Feed system	X、Y、Z	m/min	48	48	48
	A轴 A axis	rpm	50	50	50
	C轴 C axis	rpm	100	100	60
定位精度 Position accuracy	X、Y、Z定位精度 Position accuracy	mm	0.008	0.008	0.008
	X、Y、Z重复定位精度 Repeat position accuracy	mm	0.006	0.006	0.006
	A/C轴定位精度 Position accuracy	a/c sec	8	8	8
	A/C轴重复定位精度 Repeat position accuracy	a/c sec	5	5	5
刀具数 Tool position		把	32	32	32
最大刀具直径 Max. tool diameter		mm	75	75	75
最大刀具长度 Max. tool length		mm	300	300	300
最大刀具重量 Max.tool weight		kg	8	8	8
电源 Power		kVA	80	80	80
机床重量 Machine weight		kg	13500		

注：此页参数为标准配置时参数，配置变更时部分参数可能会随之改变

Note:The parameters on this page are standard configuration parameters may change when the configuration is changed.

机床配置表 ●标配 ○选配 -没有

主要配置 Main configuration			FMC-600V	FMC-800V	FMC-1000V
数控系统 CNC system	西门子SINUMERIK ONE数控系统（五轴联动）	Siemens SINUMERIK ONE CNC (5-axis linkage)	●	●	●
主轴系统 Spindle system	HSK63A-18000r/min电主轴	HSK63A-18000r/min motorized spindle	●	●	●
进给系统 Feed system	X/Y/Z轴滚珠丝杠/专用轴承/交流伺服电机	X/Y/Z axis ball screw/specialized bearing/AC servo motor.	●	●	●
冷却系统 Cooling system	国产冷却泵，含冲屑系统，链式排屑器、运屑车	Domestic cooling pump, including chip flushing system, chain chip conveyor and cart	●	●	●
刀库 Tool magazine	标配:HSK63AX32T链式刀库	Standard configuration: HSK63AX32T chain tool magazine	●	●	●
	选配:HSK63AX64T(32T+32T)链式刀库	Optional configuration: HSK63AX64T(32T+32T) chain tool magazine	○	○	○
液压系统 Hydraulic system			●	●	●
润滑系统 Lubrication system	导轨滑块、滚珠丝杠螺母均采用稀油集中润滑装置,定时定量提供润滑；注油时间间隔可调,润滑不足时机床显示报警；	Guideway blocks and ball screw nuts all adopt thin oil centralized lubrication device to provide lubrication at regular intervals; The interval of oil injection time is adjustable, and the machine tool displays an alarm when the lubrication is insufficient;	●	●	●
光栅尺 Grating scale	X/Y/Z轴光栅尺 A、C轴配高精度角度编码器	X/Y/Z-axis grating scale A and C-axis with high-precision angle encoder.	●	●	●
对刀装置 Tool setting device	选配：工件检测	Optional configuration: workpiece detection	○	○	○
	选配：刀具检测	Optional configuration: tool detection	○	○	○
机床电源 Machine power	电源电压范围：交流三相 380V±10% 50Hz； 电源容量： 80KVA；	Power supply voltage capacity: AC three-phase 380V±10% 50Hz; power supply capacity: 80KVA;	●	●	●
机床颜色 Colors of machine	宝鸡机床标准色； 可根据用户提供色板变更机床颜色	Standard colors for Baochi machine tool; Machine color can be changed according to the color palette provided by the user	●	●	●

04 机床图释 Machine tool illustration

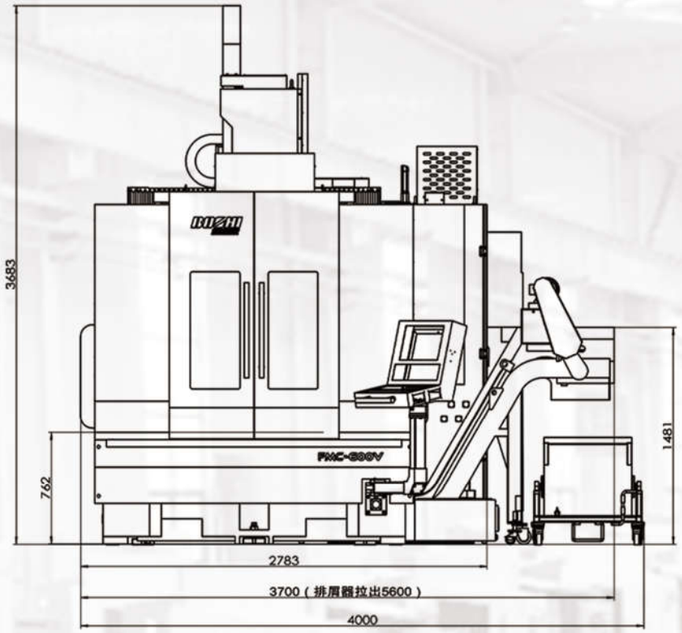

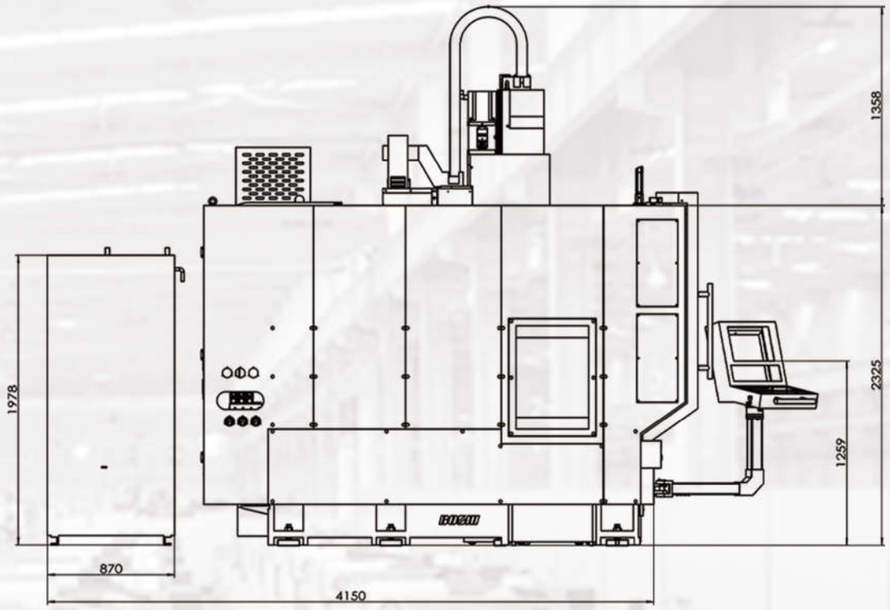

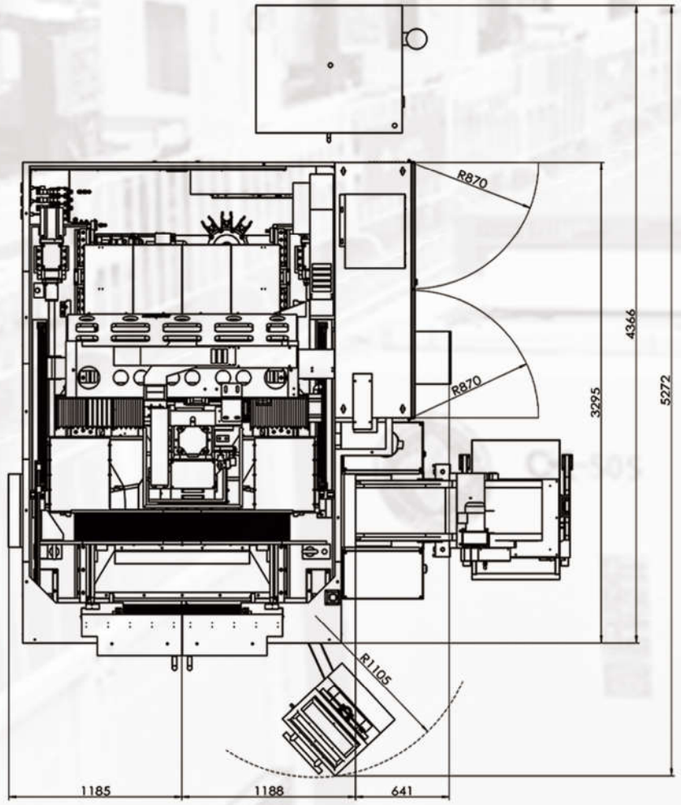

05 典型样件 Typical samples



典型样件1
Typical samples 1

典型样件2
Typical samples 2





典型样件3
Typical samples 3

适用行业：汽车、刀具、高铁、医疗器械、模具等制造业对中小型模具、壳体类、板类、异型零件进行高精度、高速加工。

Applicable industries:Automobiles,knives,high-speed railways,medical devices,molds and other manufacturing industries carry out high-precision and high-speed processing of small and medium-sized molds,housings,plates and special-shaped parts.