宝鸡机床集团有限公司
BAOJI MACHINE TOOL GROUP CO.,LTD
宝鸡忠诚机床股份有限公司
BAOJI ZHONGCHENG MACHINE TOOL CO.,LTD

数控立式车床

CNC Vertical Lathe

匠 心 智 造 中 国 好 机 床



地址:中国陕西省宝鸡市高新十四路
Add: Gaoxin 14 Road,Baoji,Shaxi,China
邮编Postcode:721013
企业邮箱Email:gsbgs@bjmtw.com
官方网址Http://www.bjmtw.com

国内贸易Domestic Trade
电话Tel:0917-3566908 3566909
传真Fax:0917-3566966
邮箱Email:xsgs@bjmtw.com

国际贸易International Trade
电话Tel:+86-917-3566893 3566897
传真Fax:0917-3566900
邮箱Email:sales@bjmtw.com

全国客户服务热线Hot Line:400-119-9196

本样册内所印各种说明及图片如有变动，恕不另行通知（202503版）
Design and specifications given herein are subject to change without prior（Version 202503）

www.bjmtw.com



01 产品概况 Product Overview

(1)卡盘式数控立式车床

卡盘式数控立式车床包含CK51系列、BK系列、BVL系列数控立式车床，该系列机床配备中实液压卡盘、线性滚柱导轨、立式转塔刀架，适用于大中小型盘、盖、法兰类零件的粗精加工。

CK51系列包括CK514系列、CK516系列、CK518系列产品。

BK系列包括BK40-2（后排）、BK50-2（侧排）两款产品。该系列机床采用双主轴、双刀架结构，机床采用双通道系统，可同时完成不同零件的加工。

BVL系列包括BVL63、BVL80、BVL100三个产品。该系列机床加大床身导屑角度，全封闭外开门防护，导屑流畅，运行可靠。

(1)Chuck Type CNC Vertical Lathes

Chuck type CNC vertical lathe includes CK51 series CNC vertical lathe, BK series CNC vertical lathe and BVL series CNC vertical lathe, which are equipped with solid hydraulic chuck, linear roller guideway and vertical turret . It is suitable for rough machining and precise machining of large, medium and small-sized disk, cover and flange parts.

CK51 series CNC vertical lathe includes CK514 series CNC vertical lathe, CK516 series CNC vertical lathe and CK518 series CNC vertical lathe.

The BK series CNC vertical lathe includes two models, BK40-2 (with rear-type chip conveyor) and BK50-2 (with side-type chip conveyor). This series lathes adopts double spindles and double tool holders structure, and the lathe adopts double-channel system, which can finish machining of different parts at the same time.

BVL series CNC vertical lathe includes three products: BVL63, BVL80 and BVL100. This series of machine tools have enlarged the angle of bed chip removal, fully enclosed outer door protection, smooth chip removal and reliable operation.

(2)工作台式数控立式车床

工作台式数控立式车床包括CK51系列和CD系列数控立式车床，该系列机床适用于汽车、风电、工程机械、电机壳等行业的大、中型盘、盖及短轴类零件的加工。

CK51系列工作台式数控立式车床包含CK51125、CK51160、CK51125A三个系列产品。

CD系列工作台式数控立式车床包括CD125、CD160两个系列产品。

(2)Worktable-type CNC Vertical Lathe

Worktable-type CNC vertical lathe includes CK51 series CNC vertical lathe and CD series CNC vertical lathe, which are suitable for the processing of large-sized and medium-sized disk, cover and short shaft parts in the industries of automobile, wind power, engineering machinery and motor casing, etc.

CK51 series of worktable-type CNC vertical lathe includes three series of products: CK51125, CK51160 and CK51125A.

CD series worktable-type CNC vertical lathe includes two series of products: CD125 and CD160.

02 性能优势 Performance advantages

- 采用高强度灰铸底座、立柱、横梁，有良好的稳定性和抗震性能；
- 主轴高精密弹筒式结构，套筒采用对称、悬挂式结构，采用进口润滑油，全封闭、免维护；
- 床鞍、立柱采用超重载滚动导轨，承载高、动态响应快；
- 卡盘立车配备6工位立式刀架，干涉小、刚性高、换刀迅速、可靠；
- 工作台立车横梁具有卸荷机构，动态响应性好；
- 集中式机床操作面板，使操作更加方便、快捷。

●It adopts high-strength gray casting base, column and beam, which has good stability and anti-vibration performance;

●The spindle is of high-precision bullet cylinder structure, and the sleeve adopts symmetrical and suspended structure, adopting imported lubricating oil, which is fully closed and maintenance-free;

●The saddle and column adopt ultra-heavy load roller guideway with high load bearing and fast dynamic response;

●The chuck vertical lathe is equipped with 6-station vertical turret, with small interference, high rigidity, rapid and reliable tool change;

●The crossbeam of worktable vertical lathe has unloading structure and good dynamic response;

●Centralized machine operating panel, making the operation more convenient and faster.

03 典型样件 Typical samples



典型样件1

典型样件2





典型样件3

1）卡盘式立式车床系列
1)Chuck-type vertical lathe



底座、立柱：采用高强度灰铸铁底座、立柱，有良好的稳定性和抗震性能。

Base and column:it adopts high-strength gray cast iron base and column,which has good stability and anti-vibration performance.



主轴：精密、高刚度弹筒式主轴结构，主轴套筒对称、悬挂式设计，可更好的消除热变形对加工精度的影响。主轴采用进口高级润滑脂润滑，全封闭，免维护。

Spindle: It adopts precision and high rigidity bullet cylinder spindle structure, and the symmetrical and hanging design of spindle sleeve can better eliminate the influence of heat distortion on machining accuracy. The spindle is lubricated with imported high-level grease, fully enclosed and maintenance free.

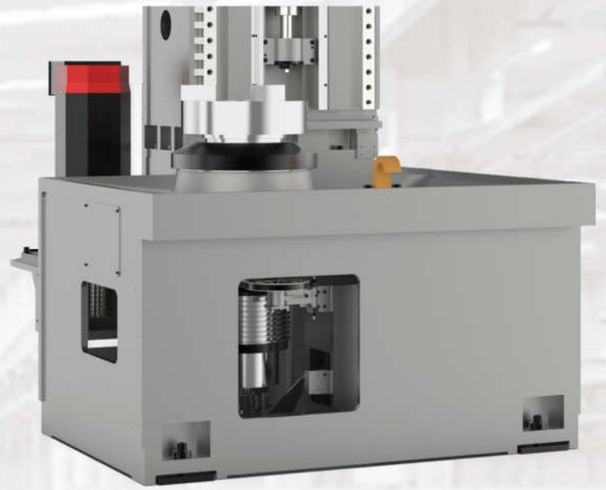

卡盘：主轴卡盘配置丰富，多规格中实液压卡盘配置，满足不同零件加工需求。

Chuck:spindle chuck configuration has a variety of optional configuration,there are multiple specifications solid hydraulic chuck configuration,to meet the needs of different parts processing.

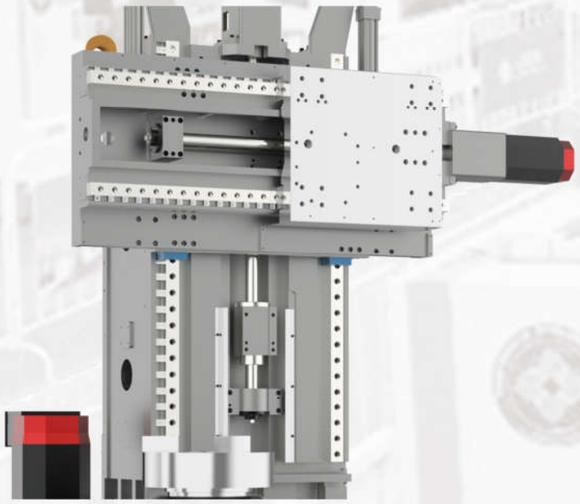

导轨：床鞍、立柱导轨采用超重负荷直线滚柱导轨，动态响应快。X/Z轴采用高精度滚珠丝杠和丝杠专用轴承，精度保持性好。

Guideway:the saddle and column guideway adopt ultra heavy load linear roller guideway with fast dynamic response.x/z axis adopts high-precision ball screw and special bearing for screw with good accuracy.

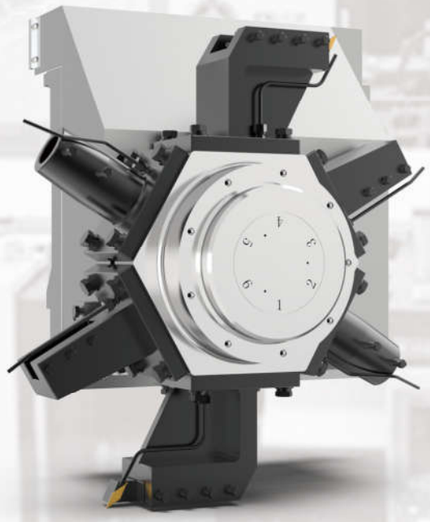

刀架：配备优质立式6工位伺服刀架，刚性高、换刀迅速、可靠；另可选配卧式8/12工位刀架，配置丰富。

Turret:It is equipped with high quality vertical 6-station servo turret with high rigidity,rapid and reliable tool change;it is available to choose horizontal 8/12-station turret with optional configuration,with a variety of choices for configurations.



主电机：大功率交流主轴电机配两档变速箱或大功率电机直连主轴配置，即可输出大扭矩，又可高速运转，满足不同零件加工需要。

Main motor:high power AC spindle motor with two gearboxes or high power motor directly connected to the spindle configuration,which can output high torque and high speed operation to meet the needs of different parts processing.

2)工作台式立式车床系列
2)Worktable-type vertical lathe

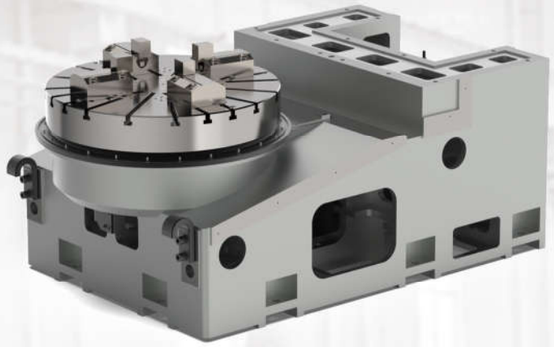

铸件： 底座、立柱及横梁采用高强度灰铸铁铸造，吸震性好；大跨距淬硬导轨，并进行贴塑、刮研工艺，耐磨性好，摩擦阻力小，精度保持长久。

Casting: The base, column and beam are made of high-strength gray cast iron, with good vibration-absorbing performance; the large-span hardened guideway. It is treated with hardening and grinding, also uses turcite and precision hand scraping processes, which can achieve small friction resistance and keep the precision for a long time.



刀架、刀库： CK51125、CK51160采用大规格四工位电动刀架，CK51125A为十二工位刀库，刀具容量大、换刀迅速、可靠。

Turret and tool magazine: CK51125 and CK51160 adopt large-size four-station motorized turret, and CK51125A is 12-station tool magazine, which has large tool capacity, rapid and reliable tool change.



滑枕： CK51125、CK51160为T型滑枕结构，CK51125A为方形滑枕结构，刚性高，精度好。

Slider: CK51125 and CK51160 are T-type slider structure, and CK51125A is square slider structure with high rigidity and good precision.



CD底座： 对称式箱式结构，高强度工作台，高刚性，可承载大扭矩重切削。

CD Base: symmetrical box structure, high strength worktable, high rigidity, can carry large torque heavy cutting.



横梁： CK51125A为固定式横梁，CK51125、CK51160采用可升降式横梁，CK51125采用减速器加丝杠的方式，CK51160采用液压推拉与锁紧方式，在行程内可保持在适宜加工位置，以适应不同工件的加工。

Beams: CK51125A adopts fixed beam,CK51125 and CK51160 adopt moving beams, CK51125 is with reducer plus screw,CK51160 adopts hydraulic push-pull and locking methods,which can be kept in the appropriate position within the stroke to adapt to different workpiece processing.



CD滑枕： CD系列机床采用方滑枕、单刀座结构，刚性好、精度稳定、可靠，性价比高。

CD slider: CD series vertical lathe adopts square slider and single tool holder structure, good rigidity, stable and reliable precision and high cost performance.

项目 Item		单位 Unit	CK514/CK514Z	CK516/CK516Z	CK516A	CK518	BVL63	BVL80	BVL100	BK40-2（双主轴）	BK50-2（双主轴）
加工范围 Capacity	床身最大回转直径 Max. swing diameter over bed	mm	Φ650	Φ850		Φ1000	Φ700	Φ900	Φ1100	Φ450	Φ500
	最大车削直径(盘类) Max. turning diameter	mm	Φ550	Φ750		Φ900	Φ630	Φ800	Φ1000	Φ400	Φ500
	最大车削高度 Max.turning height	mm	420	600		800	580	750	800	360	360
	过床鞍最大车削直径 Max.turning diameter over slide	mm	Φ450	Φ630		Φ800	Φ630	Φ800	Φ1000	Φ350	Φ420
主轴 Spindle	液压卡盘直径 Hydraulic chuck diameter	in	12″ 中实	18″ 中实		24″ 中实	12″ 中实	18″ 中实	24″ 中实	12″ 中实	12″ 中实
	主轴头型式 (GB/T5900.1) Spindle nose type		A2-8	A2-11		A2-15	A2-8	A2-11	A2-15	A2-8	A2-8
	主轴轴承直径(前/后) Spindle bearing diameter(Front/Back)	mm	Φ130/Φ120	Φ180/Φ160		Φ200/Φ180	Φ130/Φ120	Φ180/Φ160	Φ200/Φ180	Φ110/Φ100	Φ110/Φ100
	主轴转速 Spindle speed	r/min	50-2500	10-1600	80-1200	30-800	30-3000	10-1600	30-800	50-800	50-800
	主电机功率(连续/30分钟) Spindle motor power(Cont./30min)	kW	22/30	22/26	30/37	30/37	18.5/22	22/26	30/37	11/15	11/15
床鞍 Saddle	移动距离(X/Z) Travel (X/Z)	mm	450/550	640/650		710/850	380/600	455/750	520/850	300/380	300/380
	快速移动距离(X/Z) Rapid travel (X/Z)	m/min	12/16	14/14		12/12	20/20	20/20	20/20	12/12	12/12
刀架 Turret	刀位数 Tool number		立式6工位	立式6工位		立式6工位	卧式8工位	卧式8工位	卧式8工位	立式4工位	立式4工位
	刀具尺寸（车削/镗孔） Tool size(Turning/Boring)	mm	32×32/Φ50	32×32/Φ50		32×32/Φ50	32×32/Φ50	32×32/Φ50	32×32/Φ50	32×32	32×32
其它 Other	电源 Power	kVA	50	55		70	50	55	70	45	45
	体积(长×宽×高)(不含排屑器) Dimension(L*W*H) without chip conveyor	mm	2400×1880×2850	2500×2600×3400		3000×2737×3575	2600×1980×3300	3000×2600×3400	3300×2700×3900	3400×2000×2600	2950×2100×2600
	主机总重量 machine gross weight	kg	6000	10000		13500	7000	9500	13500	8000	8000
精度 accuracy	定位精度X/Z Position accuracy X/Z	mm	X:0.012 Z:0.015	X:0.015 Z:0.015		X:0.015 Z:0.020	X:0.010 Z:0.010	X:0.010 Z:0.010	X:0.015 Z:0.020	X:0.035 Z:0.040	X:0.035 Z:0.040
	重复定位精度X/Z Repeat position accuracy X/Z	mm	X:0.005 Z:0.006	X:0.006 Z:0.006		X:0.006 Z:0.009	X:0.008 Z:0.008	X:0.008 Z:0.008	X:0.008 Z:0.009	X:0.008 Z:0.015	X:0.008 Z:0.015
	圆度 roundness	mm	≦0.005	≦0.005		≦0.005	≦0.005	≦0.005	≦0.005	≦0.007	≦0.007

注：此页参数为标准配置时参数，配置变更时部分参数可能会随之改变

项目 Item		单位 Unit	CK51125	CK51125A	CK51160	CD125	CD160
加工范围 Capacity	工作台直径 worktable diameter	mm	Φ1050	Φ1050	Φ1250	Φ1050	Φ1400
	床身最大回转直径 Max.swing diameter over bed	mm	Φ1250	Φ1500	Φ1600	Φ1250	Φ1600
	最大工件长度 Max.workpiece length	mm	900	600	1200	900	500/900（加高立柱） (heightened columns)
	最大车削直径 Max.turning diameter	mm	Φ1100	Φ1250	Φ1600	Φ1100	Φ1600
	最大工件重量 Max.workpiece weight	kg	5500	3500	8000	4000	4000
主轴 Spindle	工作台转速 Max.Worktable rotate speed	r/min	2-400	2-400	2-320	15-200	5-150
	工作台最大扭矩 Max.Worktable torque	N.m	9500	9500	10630	1700	6300
	主电机功率(连续/30分钟) Spindle motor power(Cont./30min)	kW	30/37	30/37	37/45	22/30	22/30
床鞍 Saddle	X轴移动距离 X axis travel distance	mm	800	1300	1045	650	900
	Z轴滑枕移动距离 Z axis slider travel distance	mm	800	600	900	900	500/900（加高立柱） (heightened columns)
	横梁升降距离 Crossbeam lifting distance	mm	500	/	800(5档)	/	/
	快速移动速度（X/Z） Rapid speed (X/Z)	mm	10/10	10/10	10/10	10/10	10/10
刀架 Turret	刀位数 Tool number		4	12	4	3（同时2）	3（同时2）
	刀具尺寸（车削/镗孔） Tool size(Turning/Boring)	mm	32×32/Φ50	32×32/Φ60	32×32/Φ50	32×32	32×32
其它 Other	电源 Power	kVA	75	75	75	25	35
	体积（长×宽×高）（不含排屑器） Dimension(L*W*H) without chip conveyor	mm	3200×3110×4450	3750×3000×4025	4850×4800×5100	2500×2570×4000	3205×2910×3500（加高防护）/3205×2910×4060（加高立柱、加高防护） (heightened columns 、heightened guard)
	主机总重量 machine gross weight	kg	20000	18500	24000	10000	13000/14000（加高立柱、防护） (heightened columns 、guard)
精度 accuracy	定位精度X/Z Position accuracy X/Z	mm	X:0.025 Z:0.008	X:0.032 Z:0.025	X:0.032 Z:0.032	X:0.025 Z:0.032	X:0.032 Z:0.025/0.032（加高） (heighten)
	重复定位精度X/Z Repeat position accuracy X/Z	mm	X:0.008 Z:0.008	X:0.010 Z:0.008	X;0.010 Z:0.010	X:0.008 Z:0.010	X:0.010 Z:0.008/0.010（加高） (heighten)
	圆度 roundness	mm	≦0.010	≦0.010	≦0.010	≦0.010	≦0.010

注：此页参数为标准配置时参数，配置变更时部分参数可能会随之改变

04 机床数据 Machine data

机床配置表 ●标配 ○选配 -没有

主要配置 Main Specification	品牌厂家 Brand manufacturers	CK514/CK514Z	CK516/CK516Z	CK516A	CK518	BK40-2	BK50-2	BVL63	BVL80	BVL100
控制系统 control system	标配 standard configuration	FANUC TF5	FANUC TF (3A)	FANUC TF5	FANUC TF(3A)	广数988TT	广数988TT	FANUC TF(3A)	FANUC TF(3A)	FANUC TF1
	选配 optional configuration	西门子828D 广数988TA 宝鸡B80T 华中818D	西门子828D 广数988TA KND2000T 华中818D 新代22TA	广数988TA KND2000T 华中818D 新代22TA	西门子828D 广数988TA 宝鸡B80T 华中818D	宝鸡B80T	宝鸡B80T	FANUC TF5 西门子828D 广数988TA 宝鸡B80T 华中818D	FANUC TF1 西门子828D 广数988TA 宝鸡B80T 华中818D	FANUC TF5 西门子828D 广数988TA 宝鸡B80T 华中818D
中实卡盘 solid chuck	12寸 12inch	●	-	-	-	●	●	●	-	-
	15寸 15inch	○	-	-	-	○	○	○	-	-
	18寸 18inch	-	●	●	-	-	-	-	●	-
	21寸 21inch	-	○	○	-	-	-	-	○	-
	24寸 24inch	-	○	○	●	-	-	-	○	●
	32寸 32inch	-	-	-	○	-	-	-	-	○
刀架 Turret	立式4工位电动 vertical 4-station motorized	-	-	-	-	●	●	-	-	-
	立式6工位电动 vertical 6-station motorized	○	○	○	○	-	-	-	-	-
	立式6工位伺服 vertical 6-station servo	●	●	●	●	-	-	-	-	-
	卧式8工位 horizontal 8-station	○	○	○	○	-	-	●	●	●
	卧式12工位 horizontal 12-station	○	○	○	○	-	-	○	○	○
排屑装置 chip conveyor	后排链板式 rear chain type chip conveyor	●	●	●	●	●	-	●	●	●
	后排刮板式 rear scraper type chip conveyor	○	○	○	○	-	-	○	○	○
	侧排链板式 side chain type chip conveyor	-	-	-	-	-	●	-	-	-
液压单元hydraulic unit		●	●	●	●	●	●	●	●	●
润滑单元lubrication unit		●	●	●	●	●	●	●	●	●
检测装置detection device		○	○	○	○		-	○	○	○
自动化automatization		-	-	-	-	-	-	○	○	○

04 机床数据 Machine data

机床配置表 ●标配 ○选配 -没有

主要配置 Main Specification	品牌厂家 Brand manufacturers	CK51125	CK51125A	CK51160	CD125	CD160
控制系统 control system	标配 standard configuration	FANUC TF(3A)	FANUC TF(3A)	FANUC TF(3A)	KND	KND
	选配 optional configuration	FANUC TF1 西门子828D 宝鸡B80T 华中818D	FANUC TF1 西门子828D 广数988TA 宝鸡B80T 华中818D	FANUC TF1 西门子828D 宝鸡B80T 华中818D	广数988TA 广数980	广数988TA 广数980
导轨 guideway	矩形淬硬导轨 Rectangular hardened guideway	●	●	●	●	●
刀架 Turret	4工位立式 4-station vertical	●	-	●	-	-
	6工位立式 6-station vertical	○	-	-	-	-
	12工位刀库 12-station tool magazine	-	●	-	-	-
	方刀座 square tool holder	-	-	-	●	●
电柜 Electric cabinet	空调 air conditioner	●	●	●	○	○
	热交换器 heat exchanger	-	-	-	○	○
	轴流风机 axial fans	-	-	-	●	●
液压单元 hydraulic unit	国产 domestic	●	●	●	-	-
润滑单元 lubrication unit	国产 domestic	●	●	●	●	●
排屑装置 chip conveyor	侧排屑器 side chip conveyor	●	●	●	-	-
	切屑槽（盘） Chip removal groove (tray)	-	-	-	●	●
气枪、水枪 air gun、water gun		○	○	○	○	○
加高立柱 heightened columns		-	-	-	-	○
加高防护 heightened guard		-	-	-	●	●

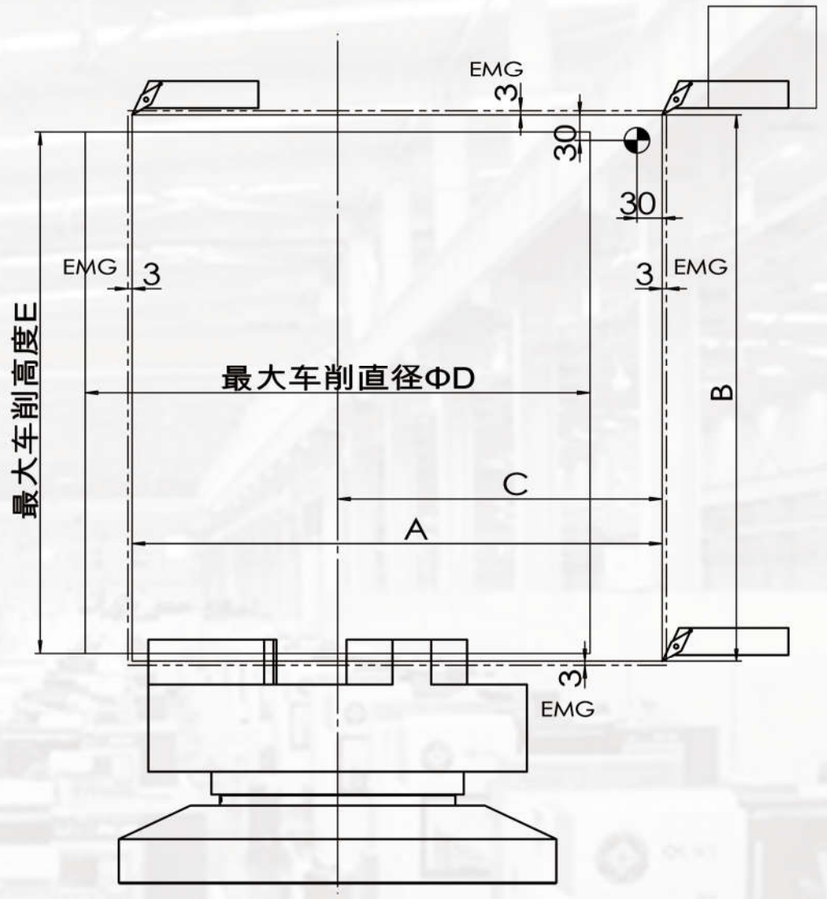

型号 model	A	B	C	D	E
CK514	450	550	332	550	420
CK516	640	650	550	750	600
CK518	710	850	620	900	800
BVL63	380	580	345	630	580
BVL80	455	750	428	800	750
BVL100	520	850	510	1000	800
BK40-2	300	380	175	350	360
BK50-2	300	380	210	420	360
CK51125	800	800	700	1100	900(工件高度) 900 (workpiece height)
CK51125A	1250	600	1150	1250	600
CK51160	1045	900	830	1600	1200(工件高度) 1200 (workpiece height)
CD125	650	900	550	1100	900
CD160	900	500/900(加高) 500/900 (heighten)	800	1600	500/900(加高) 500/900 (heighten)